ISTITUTO ITALIANO DI TECNOLOGIA

Face ventilation mask technical documentation – Cressi

Assembly and user manual

Date:	**11 April 2020**
Author:	Michele Gesino (michele.gesino@iit.it)
Description:	Assembly and user manual face ventilation mask
Reviser:	Luca Fiorio (luca.fiorio@iit.it)
Revision:	2

Rev.	Author	Description	Date
0	M. Gesino	First edition	02/04/2020
1	L.Fiorio	First revision	06/04/2020
2	L.Fiorio	Cleaning procedures results added	11/04/2020

Contents

1. Overview

CAUTION: The technical solution contained in this document was developed in response to the emergency of SARS-Cov-2 virus pandemic and did not go through all tests and controls normally required for the development of medical surgical devices.

In order to address the emergency situation caused by SARS-CoV-2 pandemic and the consequent deficiency of PPEs (Personal Protective Equipment) to preserve Medical Personnel (MP) and patients health, IIT decided to apply its Staff know-how to modify existing equipment, meant for other usage, in protective devices for MP or patients.

In particular, IIT decided to transform full-face masks snorkelling masks, into face ventilation masks for patients in intensive care. The challenge consists in adapting the "ordinary" diving masks selected to receive oxygen airflow in and control the exit of contaminated airflow out after the patients have been breathing. The goal we achieved is to allow these modified masks to be functionally connected to the ventilation machineries currently in use in most hospitals.

IIT technical solution, shown in Figure 1, consists of 3 main components:

- Full face mask Cressi Duke - Gran Facciale
- Adaptor
- Modified lid

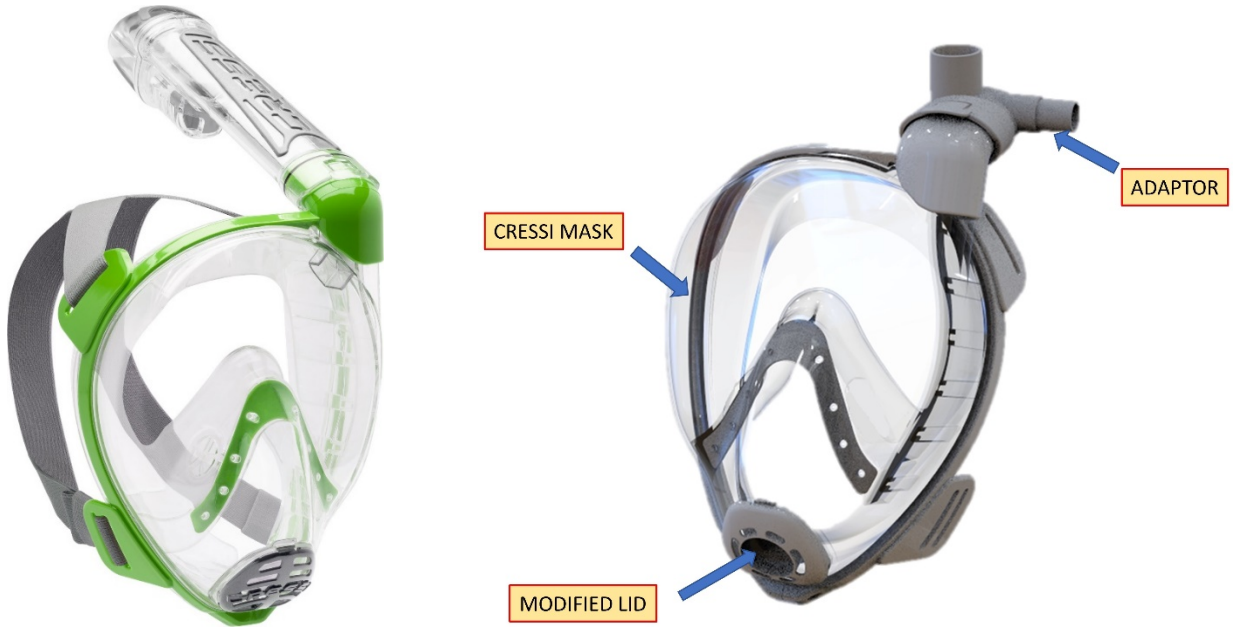

Figure 1 On the left, the original Cressi Duke Gran Facciale mask. On the right, the modified mask.

1.1 Principles of operation

The full face mask, sticking to the patient's face, creates an hermetic area. Figure 2.

Figure 2 Hermetic area inside the mask

The exchange of airflow (in & out) within the mask is sealed. The air enriched with oxygen enters from a pipe connecting the mask to a pulmonary ventilator (PV); the air breathed from the patient is expelled through a separate pipe also connected to the PV.

Figure 3 (left) shows the **inhalation** phase**.** During inhalation the airflow from the PV enters the mask hermetic chamber through section A (red arrows).

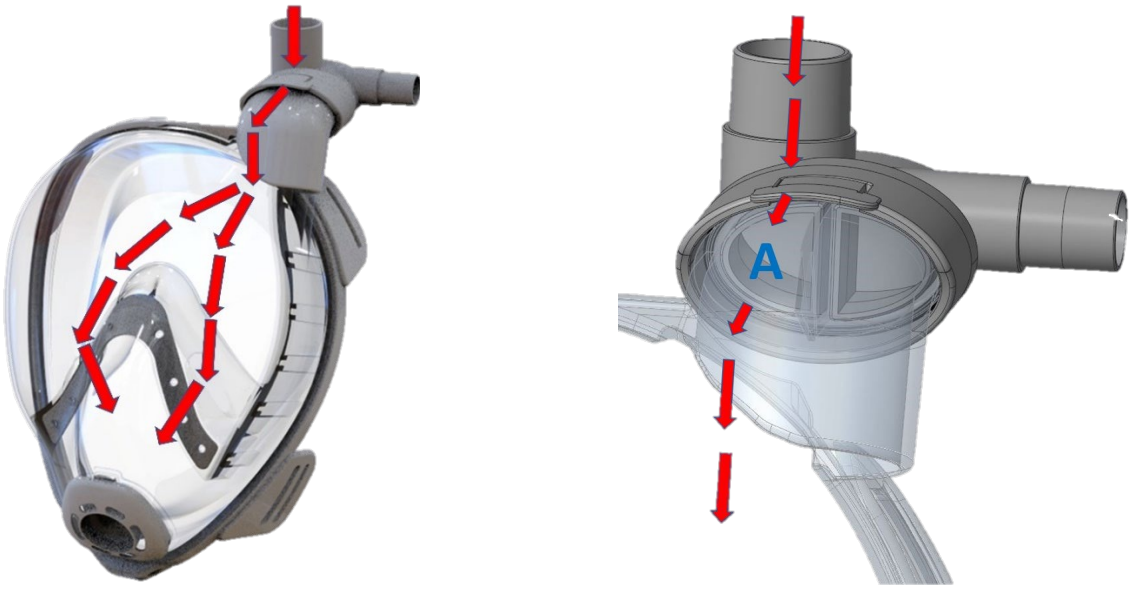

Figure 3 On the left the air flow during inhalation. On the right the adaptor section.

While the patient breaths out the polluted air, as shown in Figure 4, the flow can only run along the exit pipe inside the mask (blue arrows), connected to the PV through the section B of the adaptor.

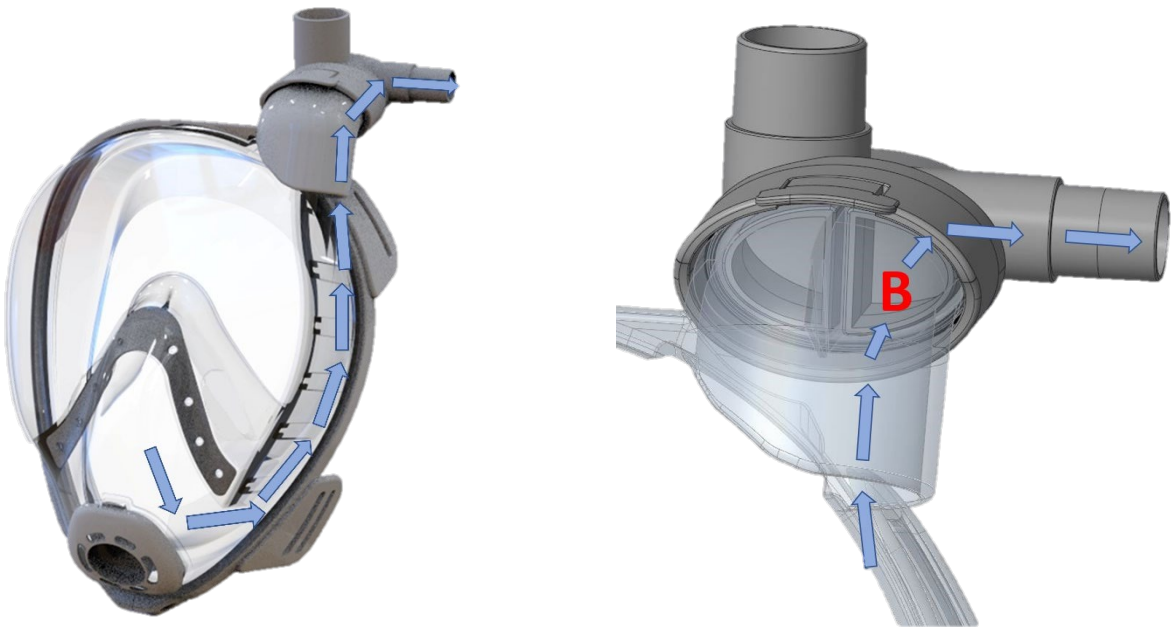

Figura 4 On the left the air flow during exhalation. On the right the adaptor section.

The airflows (in and out the mask) are always kept separate.

2. Assembly

2.1 Materials

Components needed for the prototype:

- Cressi DUKE - Gran Facciale face mask
- Adapter to connect Cressi DUKE - Gran Facciale face mask to the PV tubes
- Modified lid for frontal Cressi DUKE – Gran Facciale valve
- O-ring for frontal valve (usually not supplied)
- O-ring for adaptor (usually not supplied, though retrievable from the CRESSI mask snorkel)

In particular, the adaptor is designed for tubes with a plug-in as shown in Figure 5, but it results quite easy to adapt the 3D model to different plug-ins.

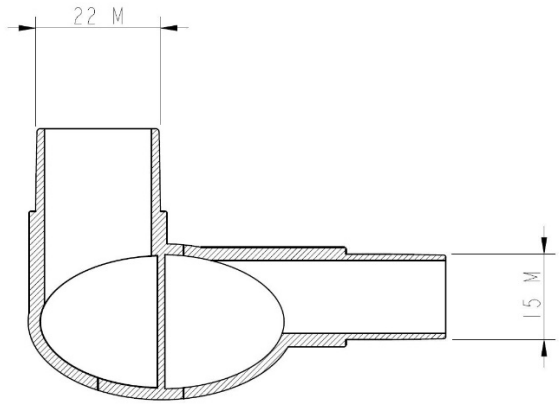

Figure 5 Adaptor section and plug-ins.

The O-ring for the frontal valve is a commercial standard component with the following features:

- material: nitrile rubber
- internal diameter: 26.5mm
- external diameter: 32.5mm
- thickness 3mm

It can be supplied by:

- RS – Article 128-940

2.2 ASSEMBLY DIAGRAM

To transform the CRESSI mask into a face ventilation mask you need to modify:

- Air entry access (snorkel);
- Air exit access (frontal valve);
- The internal non-return valve.

First, remove the original snorkel from the CRESSI full face mask. As shown in Figure 6, the mask (1) should be separated from the snorkel (2) by pressing on the highlighted flap.

CAUTION: during this operation is necessary to remove (and keep aside) the o-ring (3).

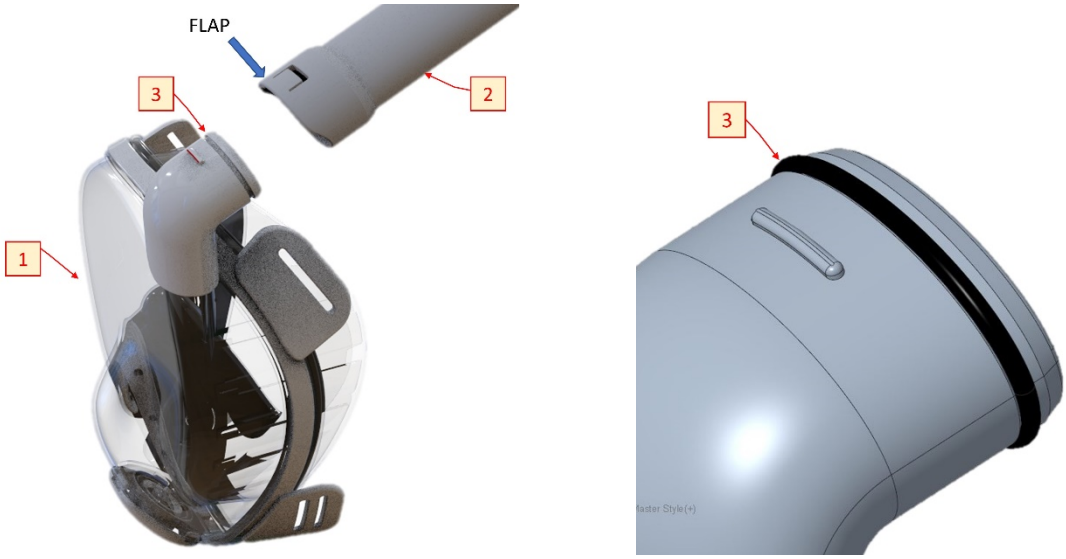

Figure 6 On the left the snorkel removal. On the right a detailed view of the o-ring

The second step consists in removing the protection lid from the frontal valve of the mask. As shown in Figure 7 you need to press on the flaps along the perimeter of the lid.

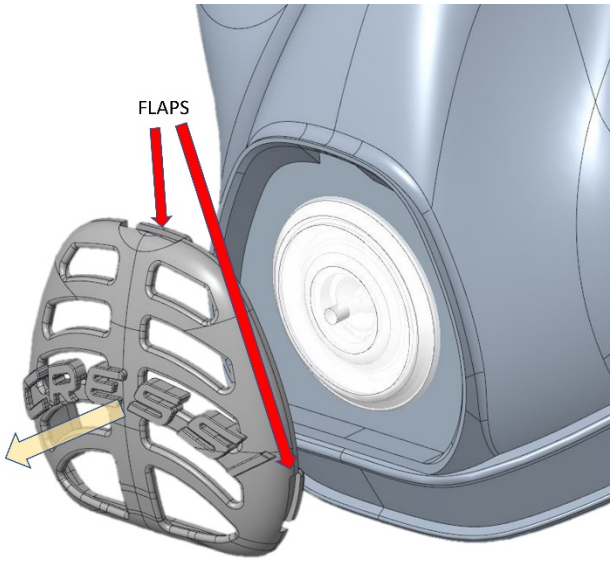

Figure 7 Front lid removal.

The third step consists in removing the non-return valves inside the mask. In particular, as shown in Figure 8, you must remove the valves regulating the flow between the goggles and the nose-mouth area.

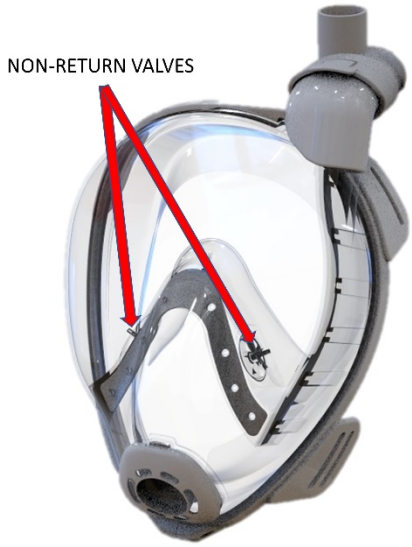

Figure 8 Non-return valves detailed view.

The last stage consists in assembling the modified mask. To do so, it is necessary to install the adaptor mask/pipes (4) on the front plug as shown in Figure 9.

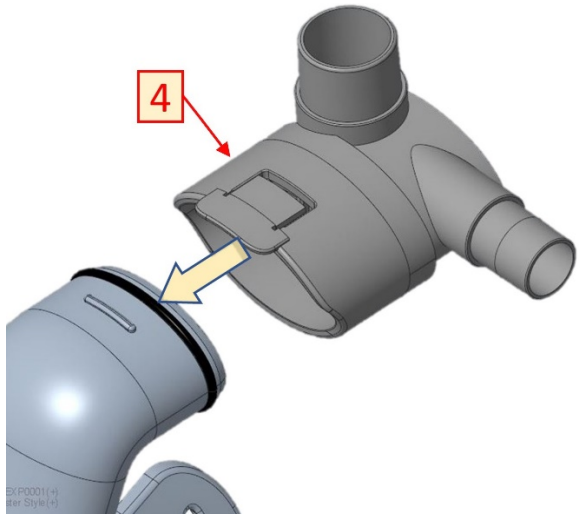

Figure 9 Adaptor installation.

Done that, you must assemble the modified lid for the front valve (6) with the necessary o-ring (5). This lid, different from the original one, has the specific function to squeeze the frontal valve and seal it, as shown in Figure 10.

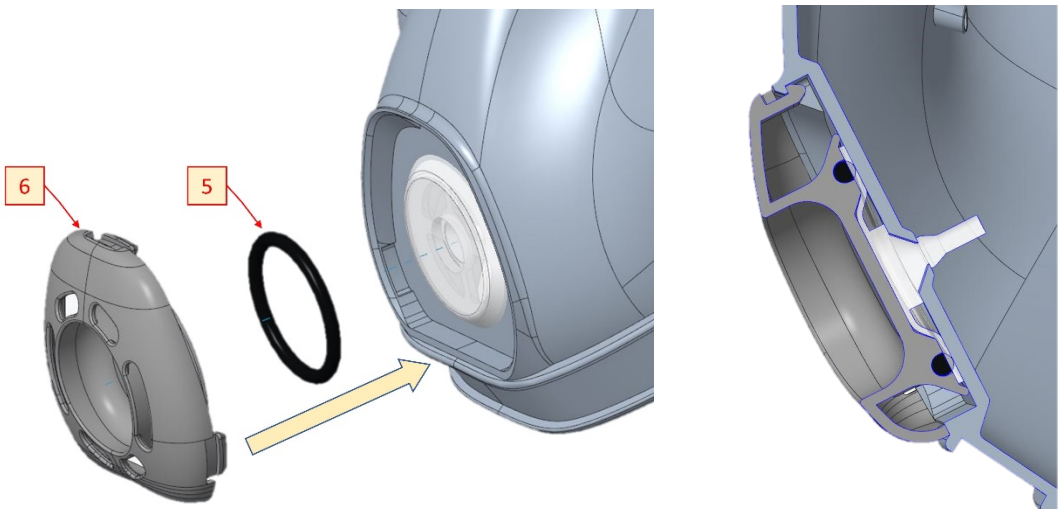

Figure 10 On the left the assembling of the front lid. On the right a section view.

3. CLEANING PROCEDURES

To clean the mask the manufacturer suggests NOT using products containing chlorine, hydrocarbon, alcohol or very aggressive surfactants.

In order to facilitate identifying an effective cleaning procedure, we tested different cleaning procedures in order to assess possible mask damages. In particular, for each cleaning procedure applied, many cleaning cycles have been performed. At the end of each cycle the mask was checked for macroscopic defects.

In order to assess the cumulative damage caused by the cleaning procedures, each testing cycle has been performed on a new mask.

Combined different cleaning procedures have not been tested.

3.1 PASTEUR OVEN

Tests were performed using the THERMOSCIENTIFIC HERAEUES UT12 device in accordance with the following procedures:

- Treatment temperature: 70 °C
- Treatment duration: 2 hours

We performed 5 cycles that did not cause any macroscopic defect on the masks. Figure 11 shows the masks before and after the 5 cycles of test.

Figure 11 On the left the mask before the cycles, on the right the mask front and back sides after the cycles.

3.2 Vapor Phase Hydrogen Peroxide (VPHP)

Tests were performed using the BIOQUELL CLARUS device connected to the TECNIPLAST RW900 device, in accordance with the following procedures:

- Treatment temperature: 65 °C
- Airflow: 25 m^3/h
- "Gassing Dwell" concentration: 350 ppm
- Post processing ventilation time: 24 hours

We performed 3 cycles that did not cause any macroscopic defect on the masks. Figure 12 shows the masks before and after each cycle.

Figure 12 On the left the mask before the cycles, moving to the right the mask after each cycle.

3.3 AUTOCLAVE

Tests were performed using the SELECTA PRESOCLAVE II 50 device, in accordance with the following procedures:

- Treatment temperature: 115 °C
- Treatment duration: 20 minutes

We performed 5 cycles that did not cause any macroscopic defect on the masks, just a slight decoloring of the printed brand on the elastic band. Figure 13 shows the masks before treatment and after 5 cycles.

Figure 13 On the left the mask before the cycles, on the right the mask front and back sides after the cycles.